MERCRUISER (300 TEMPEST GM 350 V-8 1985-1986)
Serial Nbr Range: 6668677 THRU 0B430367 ()

FLYWHEEL HOUSING (MR)

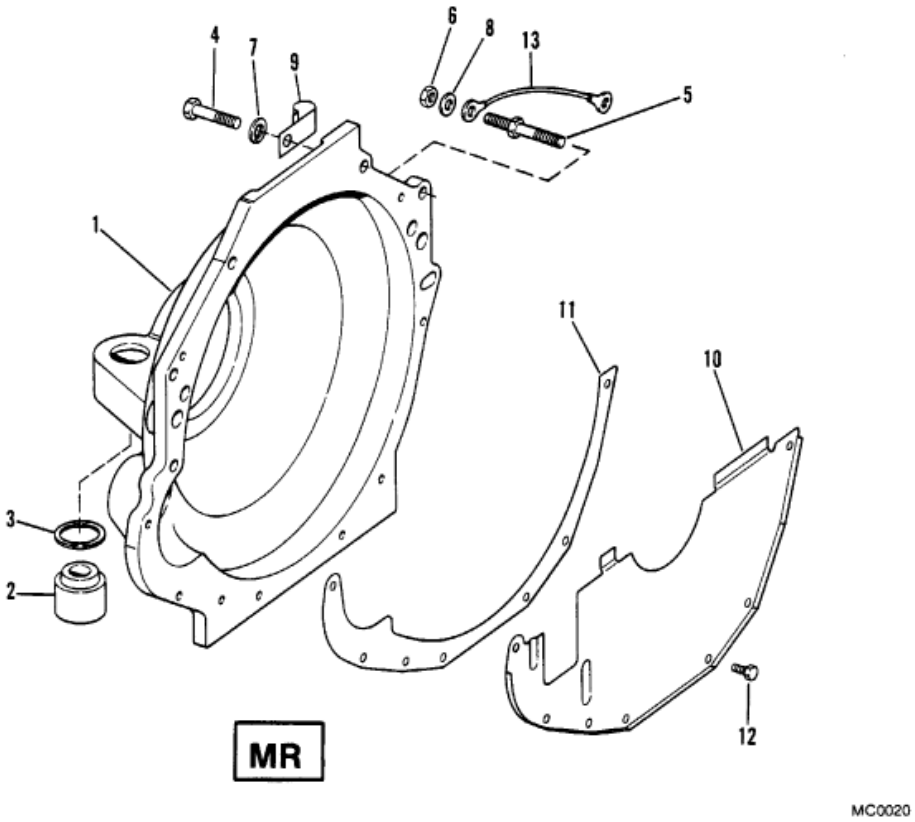

Parts List

Ref	Class	Part	Description	Qty	Comment	Footnote
1		12675A 4	FLYWHEEL HOUSING ASSEMBLY	1		
2		99297A 1	MOUNT, RUBBER- FLYWHEEL	2		
3	23	99322	SPACER, RUBBER MOUNT-FLY	2		
4	10	37612	SCREW, FLYWHEEL HOUSING A	4		
4	10	45754	SCREW, FLYWHEEL HOUSING A	1		
5	16	64066	STUB, FLYWHEEL HOUSING ATT	1		
6	11	32219	NUT, FLYWHEEL HOUSING ATTA	1		
7	13	35048	LOCKWASHER, FLYWHEEL HOU	7		
8	12	20572	WASHER, FLYWHEEL HOUSING	1	SPECIAL (3/8")	
9	54	78945	"J" CLAMP, FLYWHEEL HOUSIN	1		
10		13929A 2	COVER ASSEMBLY, FLYWHEEL H	1		
11	27	96274	GASKET, FLYWHEEL HOUSING	1		
12	10	28668	SCREW, COVER TO FLYWHEEL H	7		
13	84	62826A 6	WIRE, FLYWHEEL HOUSING STU	1		